RS*

DOUBLE-ACTING THROTTLE FLOW CONTROL VALVE

SERIES 30

THREADED PORTS
CARTRIDGE TYPE

p max (see table of performances)
Q max (see table of performances)

OPERATING PRINCIPLE

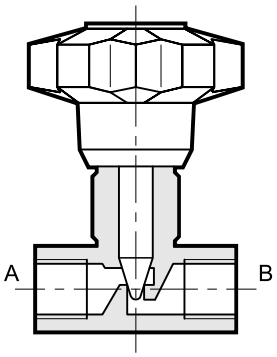

— The RS* and RS*-I valves are throttle flow control valves for in-line mounting, directly in the line or as a cartridge complete with threading for in-block mounting.

— Adjustment is obtained with a conical throttle that operates in a cylindrical seat and allows a good linearity of the adjusted flow.

— They are also used as flow shut-off valves since they guarantee good sealing when completely closed.

— The valves are always supplied with an adjustment knob that can be locked in any position with a transverse positioned grub screw, as may be required.

PERFORMANCES (obtained with mineral oil with viscosity of 36 cSt at 50°C)

Valve code	Port dimensions BSP	Nominal flow rate [l/min]	Mass [kg]	Max. operating pressure [bar]
RS2	1/4”	15	0,2	400
RS3	3/8”	30	0,4	
RS4	1/2”	50	0,6	
RS5	3/4”	80	1,3	
RS6	1”	150	2,6	320
RS7	1 ¼”	200	3,0	
RS8	1 ½”	220	4,2	
RS2-I	_	15	0,15	320
RS3-I	_	30	0,2	
RS4-I	_	50	0,3	
RS5-I	_	80	0,6	
RS6-I	_	150	1,2	

Ambient temperature range	°C	-20 / +50
Fluid temperature range	°C	-20 / +80
Fluid viscosity range	cSt	10 ÷ 400
Fluid contamination degree	According to ISO 4406:1999 class 20/18/15	
Recommended viscosity	cSt	25

HYDRAULIC SYMBOL

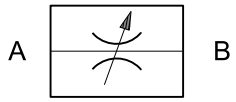

1 - IDENTIFICATION CODE

R	S		-		/	30	/	

Throttle flow control valve

Nominal dimension:
2 = 1/4” **5** = 3/4”
3 = 3/8” **6** = 1”
4 = 1/2” **7** = 1¼”
8 = 1½”

I = In-block cartidge version, available only in dimensions 2-3-4-5-6
Omit for version with threaded ports

Series No. (the overall and mounting dimensions remain unchanged from 30 to 39)

Seals:
omit for mineral oils
V = viton for special fluids

3 - HYDRAULIC FLUIDS

Use mineral oil-based hydraulic fluids HL or HM type, according to ISO 6743-4. For these fluids, use NBR seals. For fluids HFDR type (phosphate esters) use FPM seals (code V). For the use of other kinds of fluid such as HFA, HFB, HFC, please consult our technical department. Using fluids at temperatures higher than 80 °C causes a faster degradation of the fluid and of the seals characteristics.
The fluid must be preserved in its physical and chemical characteristics.

3 - OVERALL AND MOUNTING DIMENSIONS RS*

dimensioni in mm

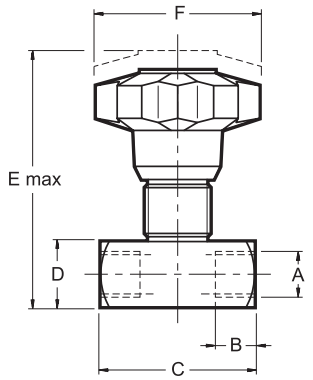

Valve	A BSP	B	C	⌀ D	E max	Ø F
RS2	1/4”	12,5	49	20	78	50
RS3	3/8”	12,5	59	25	93	70
RS4	1/2”	15,5	68	30	107	80
RS5	3/4”	17	86	40	132,5	100
RS6	1”	20	105	50	167,5	120
RS7	1 ¼”	22	120	55	172,5	120
RS8	1 ½”	24	134	65	181	120

4 - OVERALL AND MOUNTING DIMENSIONS RS*-I

dimensioni in mm

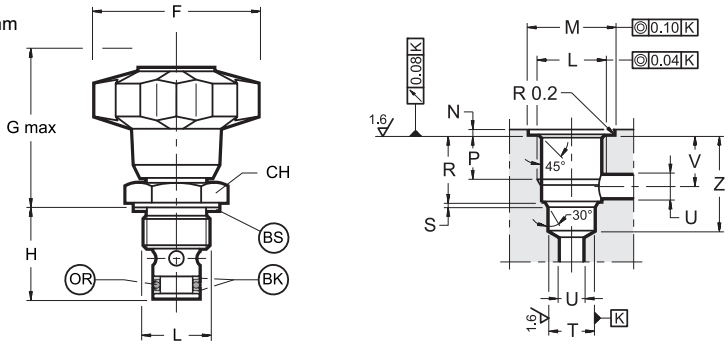

* *“BONDED SEAL”* seal excluded from the supply

sigla valvola	ØF	G max	H	L 6H	ØM + 0.2 0	N	P min	R ±0.2	S + 0.2 0	ØT H8	ØU max	V ±0.2	Z min	CH	OR type	BK type	BS* type
RS2-I	50	49.5	26.5	M20x1.5	27	1	12	16.5	1	14	5	13.3	27	27	2043	2043	400-513
RS3-I	70	57.5	30.5	M20x1.5	27	1	12	20	1.2	16	8	15.2	32	27	2050	2050	400-513
RS4-I	80	66.5	40	M27x2	33	1.3	18	28	1.2	19	10	22	41	32	2062	2062	400-520
RS5-I	100	76.5	44	M33x2	40	1.3	18	30.5	1.2	27	12	23	45.5	41	130	130	400-515
RS6-I	120	102	52.5	M42x2	50	1.3	21.5	36.5	1.5	35	16	28.5	55	50	3118	3118	400-516

DUPLOMATIC OLEODINAMICA
DUPLOMATIC OLEODINAMICA S.p.A.
20015 PARABIAGO (MI) • Via M. Re Depaolini 24
Tel. +39 0331.895.111
Fax +39 0331.895.339
www.duplomatic.com • e-mail: sales.exp@duplomatic.com

REPRODUCTION IS FORBIDDEN. THE COMPANY RESERVES THE RIGHT TO APPLY ANY MODIFICATIONS.